GİRSAN
MC P35
USER MANUAL

GİRSAN

READ THESE WARNINGS AND INSTRUCTIONS
BEFORE USING FIREARM

INDEX

Page 3…..……..... TECHNICAL SPECIFICATIONS
Pages 4-5…….....…..SAFETY RULES
Page 6…….....…..CABLE LOCK
Page 7…….....…..WARNINGS
Pages 8-9...……..….....……..…….....BASIC PARTS / SAFETY FEATURES
Page 11……..…….....…..LOADING
Page 12……..……..…….....…..UNLOADING
Pages 13-14……..……...…...…….....…….....…..FIRING
Page 15-16……..……..……...…….....…….....…..DISASSEMBLY
Pages 16-17……..……...…...…….....…….....…..ASSEMBLY
Pages 18…..…..……..……..……..…….....…….....…....MC P35 EXPLODED VIEW
Page 19…..……..……..……..……..…….....…….....……..... MC P35 PARTS LIST
Pages 20……..……..……..…….....…….....…….....CLEANING / WARNINGS

TECHNICAL SPECIFICATIONS

MODEL	GIRSAN MC P35
BARREL LENGHT	4.87"
TOTAL LENGHT	7.75"
HEIGHT	5.07”
WEIGHT	1.8 LBS
MAGAZINE CAPACITY	15+1
CALIBER	9x19 mm
TRIGGER	Single Action

⚠ **WARNING: YOU RISK PERSONAL INJURY OR DEATH BY HANDLING THIS FIREARM**

Before handling any firearm, make sure you know the safety procedures and most importantly, keep the firearm pointed in a safe direction.

Before handling this firearm, read, understand and follow the instructions in this manual. Always keep this manual with the firearm. If you lend, give or sell this firearm, be sure the manual goes with it. If there is anything you do not understand, seek advice from someone qualified in safe handling of firearms. You must ALWAYS obey the following warnings, instructions and safety procedures:

1. Always keep the muzzle pointed in a safe direction.
2. Firearms should be unloaded and secured when not actually in use.
3. Don’t rely on your firearm’s safety.
4. Be sure of your target and what’s beyond it.
5. Use only proper ammunition matching the precise caliber of your specific pistol.
6. If your pistol fails to fire when the trigger is pulled, handle with care.
7. Always wear ear and eye protection when shooting.
8. Be sure the barrel is clear of obstructions before shooting.
9. Don’t alter or modify your firearm and have it serviced regularly.
10. Learn the mechanical and handling characteristics of your pistol.
11. Shoot sober!

⚠ **WARNING (EYE AND EAR PROTECTION) -** When shooting, full eye and ear protection is mandatory at all times. Shooters and spectators must wear shooting glasses and hearing protection to prevent eye injury and hearing loss. Vision and hearing impairment can occur with only one moment of non-protection.

FOLLOWING THESE SAFETY RULES CAN SAVE YOUR LIFE OR THE LIFE OF SOMEONE ELSE

Get competent firearms instruction in safe handling before using this firearm. Please ask your dealer for names of qualified instructors near you. All guns are extremely dangerous if carelessly handled or used. Remember that the firearm user is the primary “safety” and that reliance on any mechanical safety device should never replace safe handling procedures.

This firearm **WILL FIRE** if a cartridge is in the chamber and the trigger is pulled while the safety is disengaged.

DO NOT LOAD THIS PISTOL UNTIL YOU UNDERSTAND HOW IT OPERATES.
KEEP this pistol unloaded at all times except when you are ready to fire and are sure of your target.

ALWAYS carry this pistol in a case or original box ***unloaded.***

NEVER point this pistol at anything that is not your intended target even if the pistol is unloaded. When loading, unloading, cleaning or handling, always be sure the muzzle is pointed in a safe direction and always keep your finger off the trigger.

NEVER assume any gun is unloaded. Before handling, check to make sure the chamber is empty. See Unloading Instructions. Make sure you know that this or any firearm is fully unloaded before displaying or handling it. When handling any firearm, keep your fingers away from the trigger at all times until you intend to fire.

Get instructions from a competent firearms instructor before using this or any firearm. Learn from a professional how to handle, load, unload, operate, fire and care for your gun.

NEVER PLAY with your firearm. It is not a toy and can be a very dangerous weapon that can cause serious personal injury or death.

Always keep the gun pointed in a safe direction. Treat every gun as if it is loaded...all the time. **NEVER** point any firearm (loaded or unloaded) at any person or anything you do not intend to shoot. Always keep your gun unloaded until ready to use and make sure that it is unloaded before cleaning.

Keep your finger **OFF** the trigger until you are actually aiming at the target and ready to shoot. Learn to rest your finger outside of the trigger guard.
Never rely on a gun’s “safety” to protect you from unsafe gun handling. A safety is only a mechanical device, not a substitute for using common sense and following gun safety procedures.

Never leave a gun unattended or where it could fall.

Store guns and ammunition separately **beyond the reach of children.** Make sure that they are properly secured so untrained individuals and children will be denied access to your guns and ammunition.

Test your gun’s operation and safeties only at a shooting range while the firearm is pointed in a safe direction.

If a gun fails to fire when the trigger is pulled, keep it pointed down range at the target for 60 seconds. Sometimes slow primer ignition will cause a “hang fire” and the cartridge will go off after a short pause. If it still fails to fire, keep the muzzle pointed in a safe direction and avoid exposure to the breech, as you attempt to unload your firearm.

FOLLOWING THESE SAFETY RULES CAN SAVE YOUR LIFE OR THE LIFE OF SOMEONE ELSE

Know your target and what is beyond. Ask yourself what your projectile will hit if it misses the target or passes through the intended target. Remember, a fired projectile can travel over a mile (including a ricochet) and is capable of going through walls. Never shoot at hard flat surfaces or water, bullets ricochet.

Guns and alcohol or drugs do not mix. Don’t take any alcoholic beverages and/or drugs before or during shooting activities.

Never pull a gun toward you by the muzzle. Don’t climb a tree, cross a ditch or fence with a loaded gun.

Always empty guns before entering a house, car, truck, boat, RV, camp or any building.

When receiving a gun, always open the action and check to make sure the chamber is unloaded.

NEVER accept anyone’s word that a gun is “unloaded” or “empty.” You should immediately open the action and check to make sure it is unloaded.

Be careful with **ALL** ammunition. Even “blank” cartridges are deadly at close range due to the muzzle blast. Make sure your ammunition is new and in good clean condition. Do **NOT** oil or grease ammunition as this may damage the cartridge primer. Do **NOT** tamper with or alter the standard factory ammunition.

Keep firearms unloaded when not actually in use. Load the gun only when on the range preparing to fire and unload it before leaving the range.

Never put your hand over the muzzle of a gun.

ALWAYS WEAR protective shooting glasses and hearing protection when using firearms.

Spectators should be at least 10 feet behind and away from the shooter while the shooter is loading, shooting and unloading. Spectators should wear eye and ear protection and avoid distracting those shooting their firearms.

Never drop your gun. If you do drop it, unload it and check it for proper function before using it again.

Do **NOT** alter or modify your gun. Don’t try to change your gun’s trigger pull, because it may affect sear engagement and thereby cause accidental firing.

Do **NOT** remove any internal safety or safety device on the firearm. Safety mechanisms are designed to help protect you from personal injury or death.

Properly maintain and keep your gun clean. Keep it in a dry place away from other metals and water. If your gun shows sign of corrosion or improper operation, have it serviced by a competent gunsmith.

Keep the muzzle pointed in a safe direction when loading and unloading your gun. Never point the muzzle at anyone. Never let water, snow, mud or other material enter the barrel. Always be sure the barrel is free of any obstruction.

FOLLOWING THESE SAFETY RULES CAN SAVE YOUR LIFE OR THE LIFE OF SOMEONE ELSE

Use the correct ammunition for your firearm. (See Ammunition Warning)

Teach children: 1. NOT to touch guns, bullets, cartridges, shells, flares or any explosive device and **2**. That if they discover such a dangerous item or weapon, they must immediately report its location to their parents, school teacher or police.

Remember a firearm has the capability of taking your life or the life of someone else. Be careful with your firearm - an accident is almost always the result of not following basic safety rules.

Use the Cable Lock Provided with your Pistol

This pistol comes with a cable lock to assist in protecting against unauthorized use. The pistol must be unloaded when the security lock and block are in place on the pistol.

⚠ **WARNING**: Using the cable lock and block or lockable case cannot substitute for securing your firearm and ammunition in separate, locked locations.

The cable lock operates as follows:

A) Remove security lock and block from its package that came with the firearm.

B) Begin by locking the slide in the open position. Then feed one end of the cable through the magazine well up through the ejection port of the slide. Finally, insert the cable into the lock block (**See Figure 1**).

Figure 1

⚠ **WARNING: Always** store the key to the cable lock: (1) in a separate location away from the pistol; (2) in a secure location unknown and not accessible to others, especially children. Whether you secure your firearms by using the supplied cable lock, a gun lock or safe or some other mechanism, it is **YOUR RESPONSIBILITY** to store your firearms in such a manner that children and other unauthorized persons cannot gain access to them.

WARNING (POTENTIAL OBSTRUCTIONS) - BEFORE LOADING or firing a pistol, examine the bore and the firing chamber to be certain they are clean and free of any obstruction. Even a heavy coat of oil, grease, snow or water may result in damage to the firearm and injury to the shooter and/or persons near the firearm. A misfire or unusual sound upon firing is a signal to cease firing and to examine the chamber and bore. If there is any obstruction, clear the obstruction and clean the bore and chamber before firing. Any bore obstruction, even if it is only partly blocked, may cause the gun to blow up if it is fired, or may cause damage to the gun such as a bulged barrel. To avoid injury or death to the shooter or bystanders, check the barrels before shooting or if a shot does not sound normal.

WARNING - Always keep the muzzle pointed in a safe direction! Never attempt to load or unload any firearm inside a vehicle, building or other confined space (except a properly constructed shooting range). Enclosed areas frequently offer no completely safe direction in which to point the firearm. If an accidental discharge occurs, there is great risk of death, personal injury or property damage. Before loading, always clean all, grease and oil from the bores and chambers, and check to be certain that no obstructions are in the barrel. Any foreign matter in the barrels could result in a bulged or burst barrel or other damage to the firearm and could cause serious injury to the shooter or to others.

⚠ **WARNING -** If there is any reason to suspect that a projectile is obstructing the barrel, immediately unload the firearm (See Unloading Instructions) and check the chamber and the bore. A projectile or some other matter may be lodged some distance down the barrel where it cannot easily be seen. Check the bore by using a cleaning rod to pass through the barrel. If a blockage is in the bore, **DO NOT ATTEMPT TO SHOOT IT OUT WITH ANOTHER CARTRIDGE, OR BLOW IT OUT WITH A BLANK CARTRIDGE OR A CARTRIDGE FROM WHICH THE BULLET HAS BEEN REMOVED. SUCH TECHNIQUE(S) CAN GENERATE EXCESSIVE PRESSURE, DAMAGE THE FIREARM AND CAUSE SERIOUS PERSONAL INJURY**. If the blockage can be removed with a cleaning rod, clean any unburned powder grains from the bore, chambers and mechanism before resuming shooting. If the blockage cannot be dislodged by tapping it with a cleaning rod, take the firearm to a gunsmith.

⚠ **WARNING (Mechanical Malfunctions) - STOP SHOOTING IMMEDIATELY AND UNLOAD YOUR FIREARM** if your firearm develops: a mechanical malfunction; binding or stoppage; spitting powder/gas; a punctured cartridge primer; a bulged or ruptured cartridge case; or a sound on firing does not sound quite right. Do **NOT** try one more shot but unload your firearm and take it and the ammunition to a qualified gunsmith for examination. Do not assume that the pistol is empty merely because you checked the chamber. You must also check the bore for any obstruction inside the barrel.

BASIC PARTS OF YOUR PISTOL

Figure 2

Figure 3

MAJOR PARTS OF YOUR PISTOL

Figure 4

GENERAL OPERATION: The single-action mechanism in this pistol will discharge a single cartridge with each pull of the trigger when the magazine and chamber are loaded, the hammer is cocked and the safety is in the OFF (fire) position. **See Figure 5**. It will continue discharging with each pull of the trigger until the magazine and chamber are empty.

Figure 5

SAFETY FEATURES

AMBIDEXTROUS SAFETY: The ambidextrous safety lever is located on the right or left rear of the pistol just below the slide. To engage the safety, the hammer must be fully cocked, lift the lever to its most upward position and release. With the safety engaged the hammer is prevented from moving forward when the trigger is pulled. The safety is a sear block safety so it blocks the sear movement.

To disengage, move the safety fully downward until it is completely down. When the safety is down, the sear is free to release the hammer to fire the pistol when the trigger is pulled.

Safety ON (SAFE) Position, Engaged

Figure 6

Safety OFF (FIRE) Position, Disengaged

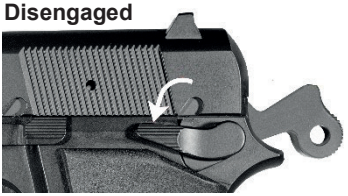

Figure 7

Always make sure the gun is pointed in a safe direction during any safety movement.

⚠ **WARNING:** Do not touch the trigger while moving the safety. When operating the safety, make sure you move it to the full extent of its travel in the desired direction, either fully “on” or fully “off.” Half-safe or partially safe is **UNSAFE**.

⚠ **WARNING:** The pistol incorporates a magazine disconnect safety, so the pistol won’t fire with the magazine removed from the pistol.

⚠ **WARNING:** The pistol is designed to and **WILL FIRE** when the trigger is pulled and the safety mechanism is in the “off” or “fire” position

⚠ **WARNING:** Never attempt to check or demonstrate safety function with a loaded pistol. Pushing on the muzzle with your hand or any other portion of the body is extremely dangerous and could result in accidental discharge causing injury, death or damage to property.

⚠ **WARNING:** Always keep your fingers off the trigger and outside of the trigger guard until you are ready to pull the trigger and fire the pistol.

⚠ **WARNING:** Always keep the muzzle pointed in a safe direction!

Hammer Resting Notch: The hammer resting notch is a resting notch on the hammer which prevents it from falling fully forward in the event of a primary sear notch failure. It also prevents the hammer from hitting the firing pin should your fingers slip from the slide or hammer while cocking the pistol, provided the hammer has been moved past the stop. The resting notch is not a manual safety. Never under any circumstances use the resting notch as “half cock” position: it can result in damage to the sear, and/or unintentional discharge of the pistol. The resting notch position is an automatically engaging safety feature and should never be engaged by hand.

⚠ **WARNING**

Your pistol has a resting notch on the hammer. This notch’s sole purpose is an additional notch on the hammer so as to allow the sear a chance to engage the hammer if the trigger is not pulled fully to the rear.

LOADING AND UNLOADING YOUR PISTOL

⚠ **WARNING:** Make sure the pistol is pointed in a safe direction and the sear block safety is always engaged while loading and unloading. **NEVER** allow your fingers or other objects to contact the trigger while loading or unloading.

⚠ **WARNING:** Do not disengage the sear block safety until you are ready to fire and have the gun pointed safely downrange.

⚠ **WARNING: Do not load pistol until you are ready to fire. Use only factory loaded ammunition 9x 19 MM manufactured to SAAMI specifications. Do not use damaged ammunition.**

Figure 8

TO LOAD THE MAGAZINE

1) Press the magazine release button, holding your hand under the magazine: this will cause the magazine to fall free of the magazine well, now you can remove the magazine from the pistol.**(See Figure 8)**

2)Load the cartridges into the magazine, placing the round at the top (open end) and pushing down and back, making sure that the back of the cartridge is facing the rear of the magazine. Do NOT force the cartridges into the magazine. Do NOT overload the magazine.

3) Push the magazine up into the pistol firmly until the magazine catch locks it into place.
Do NOT slam the magazine into place.

TO LOAD THE CHAMBER

MAKE SURE YOUR FINGERS ARE OFF THE TRIGGER AND AWAY FROM THE TRIGGER GUARD.

1) With the gun pointed in a safe direction. If the hammer is in the fully cocked position you may bypass this step.

2) Insert the loaded magazine into the magazine well with bullets pointing forward, and push up until the magazine is fully seated. A click will be heard when this is done properly as the magazine catch engages.

3) Do **NOT** put your fingers or hand in front of the barrel.

4) When you are ready to shoot, grip the rear slide serrations and pull it fully rearward to cock the hammer and then release. Do not help/push the slide down to the forward position. Allow the slide to snap forward under full tension of the recoil spring. Keeping your hand on the slide may cause a misfeed or prevent the slide from fully closing. Racking the slide back and releasing it will cock the hammer, strip off the top round in the magazine and chamber it.

5) The pistol is now loaded, cocked and ready to fire.

6) Keep the muzzle pointed in a safe direction and until you are ready to shoot. Always unload immediately after use and before storage.

⚠ **WARNING: YOUR PISTOL IS NOW LOADED AND READY TO FIRE, IF THE SAFETY IS MOVED TO THE OFF OR "FIRE" POSITION AND THE TRIGGER IS PULLED THE GUN WILL FIRE.**

TO UNLOAD

Make Sure the Safety is in the "ON" position and the gun is pointed in a safe direction.

1) Always keep the muzzle pointed in a safe direction at all times and keep the fingers outside the trigger guard. Keep hands away from muzzle and ejection port.

2) Press the magazine release button and remove the magazine from the pistol. Place your hand under magazine to prevent it from falling and press the magazine catch to release and eject magazine. **(See figure 9)**

Figure 9

⚠ **WARNING**: Removing the magazine does not unload the chamber.

NOTE: If the slide is fully rearward, step 3 & 4 do not apply

3) You must disengage the sear safety to unload the round in the chamber

4) Using the serrated finger grips pull the slide sharply rearward to extract and eject a round from the chamber. Keep your hands clear of the ejection port to allow the round to eject without obstruction. Examine the previously chambered round for any damage; if damaged, dispose of ammunition properly.

5) Keep the pistol pointing in a safe direction, allow the slide to return forward on an empty chamber. If the slide is held to the rear by the slide stop, push the slide stop down, then ease the slide forward. **Repeatedly allowing the slide to slam closed on an empty chamber will cause premature wear and should be avoided.**

6) To remove any remaining rounds from the magazine, push the cartridges forward until they clear the retaining lips.

FIRING YOUR PISTOL

⚠ **WARNING: Never load a cartridge into the chamber until you are ready to fire the pistol.**

⚠ **WARNING**: Do not disengage the sear block safety until the pistol is pointed in a safe direction and you are ready to fire.

⚠ **WARNING**: If a cartridge does not fire and the trigger has been pulled and the sear block safety is disengaged, Stop! Then do the following: **a)** Make sure the gun is pointed in a safe direction **b)** Engage the sear block safety **c)** Wait 60 seconds **d)** Follow the instructions above for unloading the pistol.

⚠ **WARNING**: If during firing the sound of any cartridge is noticeably softer or louder than the previous cartridge fired, Stop! Then do the following: **a)** Make sure the gun is pointed in a safe direction **b)** Engage the sear block safety c) Follow the instructions above for unloading the pistol and d) With the pistol unloaded visually inspect the pistol for barrel blockage or damage. Then inspect the receiver of the pistol for damage before continuing.

⚠ **WARNING**

If the pistol fails to fire, hold it, keeping it pointed toward the target or safe open area and wait 30 seconds. If a hang fire or slow ignition has occurred, the round will fire within 30 seconds. If the round does not fire, remove the magazine, eject the round and inspect primer. If the firing pin indent on the primer is light, off center or nonexistent, have the pistol examined by a competent gunsmith before firing again. If the firing pin indent appears normal assume faulty ammunition and segregate the misfired round from other live ammunition.

READ, UNDERSTAND AND FOLLOW ALL WARNINGS AND INSTRUCTIONS IN THIS MANUAL BEFORE FIRING THE PISTOL.

TO FIRE

1) This pistol has a magazine disconnect so you must have a magazine in the pistol to fire the pistol.

2) Make sure the pistol is pointed in a safe direction with the sear block safety engaged.

3) Make sure you are wearing eye and ear protection.

4) Keep your fingers away from the trigger.

5) Push the sear block safety to the “off” or “fire” position.

6) Squeeze the trigger. The pistol will fire when you pull or squeeze the trigger with the required force.

7) The pistol will fire one shot with every squeeze of the trigger, until the magazine is empty.

8) When the magazine is empty, the slide will stay open. You may remove the magazine and reload the magazine while the slide is locked open by the slide stop.

9) Insert the loaded magazine into the pistol. You may either press down on the slide stop or pull slightly back on the slide and release it. The slide will close and reload the chamber. The pistol will be ready to FIRE.

10) If all the rounds have not been fired and you wish to stop shooting, immediately engage safety lever and follow procedures for unloading as previously described. However, if you have fired the last round from the magazine the slide will stay to the rear and you will be unable to apply the safety lever.

WARNING

If you fired the pistol and wish to stop firing, immediately push the sear block safety to the “on” or “safe” position. Then follow the unloading instructions above while keeping the muzzle pointed in a safe direction.

DISASSEMBLY

WARNING: MAKE SURE YOUR HANDGUN IS UNLOADED BEFORE STARTING THIS PROCEDURE.

WARNING: Wear safety glasses in case you lose control of a spring-loaded component such as the recoil spring or plug which could injure your eyes.

1) Always make sure the magazine is removed and the pistol chamber is not loaded. The pistol should be cleaned after every use and when exposed to dirt, sand, etc. **(See Figure 9 in TO UNLOAD section)**

2) Pull the slide backwards to engage the Safety Lever into the Disassembly Recess located in front of the slide serrations. **(See figure 10**)

Figure 10

3) Push the Slide Stop through the frame by lightly pushing the button locate in the right-hand side of the pistol**. (See figure 11**)

4) Pull the Slide Stop out of the frame by grabbing it from the serrations in the left-hand side of the pistol **(See figure 12 & 13)**

Figure 11

Figure 12

Figure 13

5) Hold the slide firmly and move it slightly backwards to disengage the Safety Lever from the Disassembly Recess by moving it down. The Slide will move forward from the spring tension and off the frame **(See Figure 14).**

6) Push the Recoil Spring Guide forward to the front of the slide, then move it down and back to release it from the barrel. Remove the Spring and its guide**. (See figure 15)**

Figure 14

Figure 15

7) Move the barrel forward against the front of the slide, then downward to pull it out of the slide (See Figure 16)

8) Your firearm is now disassembled to its major parts for regular cleaning, lubrication, and maintenance. (See figure 17)

Figure 16

Figure 17

WARNING: Do **NOT** strip your pistol any further than previously described. Do **NOT** remove or alter parts, particularly safety parts.

ASSEMBLY

⚠ **WARNING:** MAKE SURE YOUR HANDGUN AND MAGAZINE ARE UNLOADED BEFORE STARTING THIS PROCEDURE

2) Place the recoil spring on its guide.
3) Press the Recoil Spring Guide against the slide to locate its head properly on the barrel concave recess **(otherwise parts may fly off and cause injury)** (See figure 18)

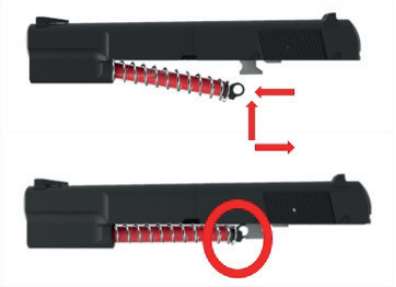

Figure 18

4) Place the Slide back on the frame and hold it all the way to the back.

5) Lock the slide back by moving the Safety Lever upward into the Disassembly Recess in the slide.
6) Place the Slide Stop back in the frame.
7) Pull the slide slightly backwards, move the Safety Lever down and let go of the slide
8) You have now successfully assembled your firearm.

WARNING: YOU COULD DAMAGE YOUR PISTOL WHEN YOU FIRE OR ATTEMPT TO FIRE IF THE RECOIL SPRING PLUG IS NOT CORRECTLY SEATED AND LOCKED.

9) After assembling the pistol, check its function as follows:

With the magazine removed, pull the slide back fully and let it go. It should fly forward and close over the empty chamber. The hammer should stay cocked. Push the safety up and squeeze the trigger. The hammer should stay cocked. Push the safety down and squeeze the trigger (The hammer should not fall). Put a empty magazine in the pistol and pull the trigger and the hammer should fall. Partially cock the hammer and you should hear a click as the sear slips on to the safety notch. Now squeeze the trigger again and note that the hammer does not move. **If the safety notch does not function then seek help from a qualified gunsmith before using the firearm.**

Insert an **empty magazine**. Pull the slide back fully and let it go. It should NOT fly forward. Look into the ejection port at the breech face. Make sure the firing pin is not sticking through the hole. Hold the slide, push down on the slide stop and ease the slide fully forward. Put your thumb on the hammer, squeeze the trigger and ease the hammer forward.

Do these checks only after you strip and assemble the pistol. Do not slam the slide forward at any other time, except when loading. If you rack the slide when the pistol is unloaded, control it with your hand.

MC P35 (9x19 mm) EXPLODED DRAWING

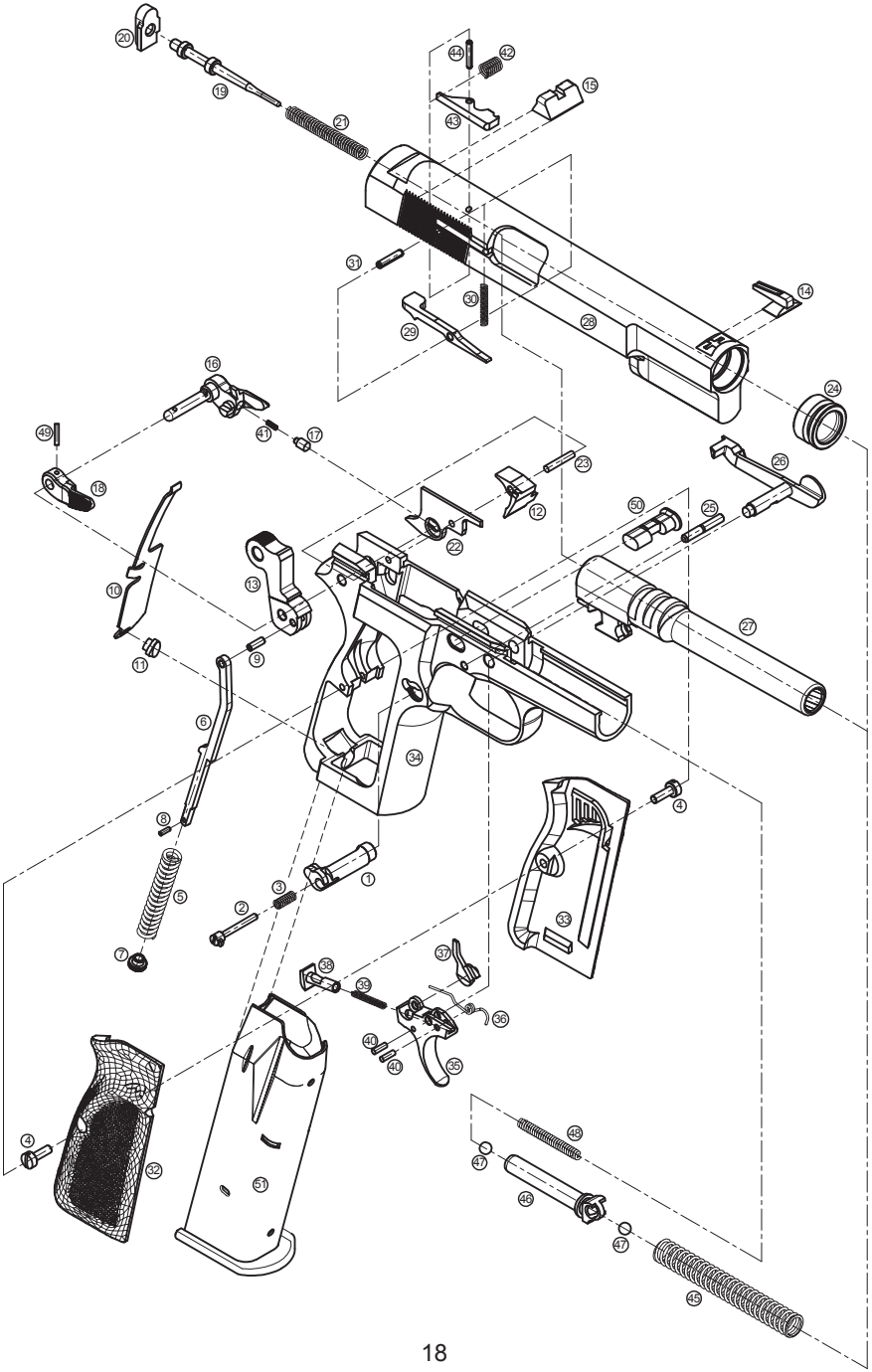

MC P35 PARTS LIST

1) Magazine Latch
2) Magazine Latch Spring Guide
3) Magazine Latch Spring
4) Grip Screw
5) Hammer Strut Spring
6) Hammer Strut
7) Hammer Strut Nut
8) Hammer Strut Nut Pin
9) Hammer Strut Fixing Pin
10) Sear Spring
11) Sear Spring Button
12) Sear
13) Hammer
14) Rear Sight
15) Front Sight
16) Safety Lever
17) Safety Lever Catch
18) Right Safety Lever
19) Firing Pin
20) Firing Pin Retaining Plate
21) Firing Pin Spring
22) Ejector
23) Cartridge Launcher Fixing Pin
24) Barrel Ring
25) Trigger Pin
26) Slide Stop
27) Barrel
28) Slide
29) Sear Lever
30) Sear Lever Spring
31) Sear Lever Pin
32) Grip Right
33) Grip Left
34) Frame
35) Trigger
36) Trigger Spring
37) Trigger Lever
38) Magazine Safety
39) Magazine Safety Spring
40) Magazine Safety Spring Pin
41) Safety Lever Catch Spring
42) Extractor Spring
43) Extractor
44) Extractor Pin
45) Recoil Spring
46) Recoil Spring Guide
47) Recoil Spring Guide Ball
48) Recoil Spring Guide Inner Spring
49) Safety Lever Pin
50) Barrel Lock
51) Magazine

MANUFACTURER'S WARNING: This firearm was manufactured to properly perform with the original parts as designed. It is your duty to make sure any parts you buy are correctly installed and that neither replacements nor originals are altered or changed. Your gun is a complex tool with many parts that must relate correctly to other parts for safe and accurate operation. Putting a gun together wrong or with modified parts can result in a damaged gun, or personal injury or death to you or others. Always let a qualified gunsmith work on your gun or at least, check any work not performed by a gunsmith. Firearms safety is your primary concern. **THE GUN OWNER MUST ACCEPT FULL RESPONSIBILITY FOR THE CORRECT REASSEMBLY AND FUNCTIONING OF THE FIREARM AFTER ANY DISASSEMBLY OR REPLACEMENT OF PARTS.**

TO CLEAN AND MAINTAIN YOUR PISTOL:

A) Follow procedures for unloading pistol as described previously.

B) Follow procedures for disassembly of pistol as described previously.

C) Materials needed to clean this pistol are: a cleaning rod, cotton bore patches, brass bore brush, powder solvent, a small soft brush and good quality gun oil.

D) Using the bore brush with powder solvent, scrub the interior of the barrel and chambers to remove any powder and lead residue in the bore. Always and lastly, swab the interior of the barrels with cotton patch with gun oil to coat and protect the bore and chambers from rust and corrosion.

E) Any powder fouling on the firing wall, barrel, etc. can be easily cleaned with a brush and powder solvent.

F) All external surfaces should be wiped down with a light coat of rust preventative. Avoid using too much oil as powder, dust or other foreign material may get trapped in the oil. This could lead to congealed deposits which may interfere with the safe and reliable operation of the pistol.

G) **USE CAUTION** while using solvents in gun bore cleaning. Prolonged or excess contact with solvents can damage the gun's bluing and finish. Be sure to wipe away all excess solvent and then lubricate with oil.

H) A gun should be cleaned after firing. In addition, external parts should be wiped with an oiled cloth after handling. A light oil is ordinarily all that is necessary in cleaning if the gun has not been fired or fired very little. If a gun is used frequently, it must be cleaned after each firing and regularly serviced by a professional gunsmith. If the gun has been stored, remove all excess oil and/or grease before firing. Always check to be sure that no cleaning patch or other obstruction remains in the bore or chambers before firing.

DANGER – AMMUNITION WARNING

Firearms may be damaged and serious personal injury or death to the shooter or bystanders may result from any condition which contributes to the generation of excessive pressure or uncontrolled release of gas within the firearm. Such adverse conditions can be caused by bore or chamber obstruction, propellant powder overloads or by defective, incorrect or improperly loaded and assembled cartridge components. Even the strongest firearm can be blown up as a result of excessive pressure. It is extremely dangerous to use a cartridge whose pressure is greater than that developed by cartridges loaded to industry standards.

AMMUNITION (CARTRIDGES) NOTICE

We specifically disclaim responsibility for any damage, personal injury or death occurring in connection with or as the result of the use of GİRSAN pistols with faulty, nonstandard, remanufactured, hand-loaded or reloaded ammunition, or with cartridges other than factory cartridges for which the firearm was originally chambered.

LUBRICATION WARNING: Firing a pistol with oil, grease or any other material even partially obstructing the bore may result in damage to the pistol and personal injury to the shooter and those nearby. Do not spray or apply lubricants directly on ammunition. If the primer or powder charge of a cartridge is affected by the lubricant, they may not fully ignite yet the energy from the primer and/or powder may be sufficient to push the projectile or wad into the bore where it may become lodged. Firing a subsequent cartridge into the obstructed bore will damage the pistol and may cause personal injury to the shooter and those nearby. Use lubricants properly. You are responsible for the proper care and maintenance of your firearm and ammunition.

WARNING (ALTERATIONS OR MODIFICATIONS): Altering or modifying parts and/or internal safeties is dangerous and will void the warranty. This pistol was manufactured to perform properly with the original parts as designed. It is your duty to make sure any parts you buy are made for this firearm and are installed correctly and that neither the replacements nor originals are altered or changed. Your gun is a complex precision tool with many parts that must relate correctly to other parts in order for proper and safe operation. Putting a gun together wrong or with incorrect or modified parts can result in a damaged gun, danger, and personal injury or death to you and others through malfunction. Always have a qualified gunsmith work on your gun or at least check any work not performed by a gunsmith.

WARNING

Children are attracted to and can operate firearms that can cause severe injuries or death. Prevent child access by always keeping guns locked away and unloaded when not in use. If you keep a loaded firearm where a child obtains and improperly uses it, you may be fined or sent to prison.

NOT :

NOT :

GİRSAN

WARNING

GİRSAN, is not responsible to result from physical wounded or occurred ownership damaging by not related to original manufacturing or by modificated pistols without permission, usage faulty and inappropriate cartridges, careless usage and crimes which done by using pistol.

MANUFACTURER

Hacısiyam Mah. Atatürk Bul. No:73/B
Merkez/**GİRESUN** TURKEY

Factory: Pazarsuyu Köyü II.OSB Mevkii 5. Cadde No:26
Bulancak/**GİRESUN** TURKEY

T: +90 454 215 29 31
: +90 454 215 39 35
F: +90 454 215 39 28
www.girsan.com | girsan@girsan.com